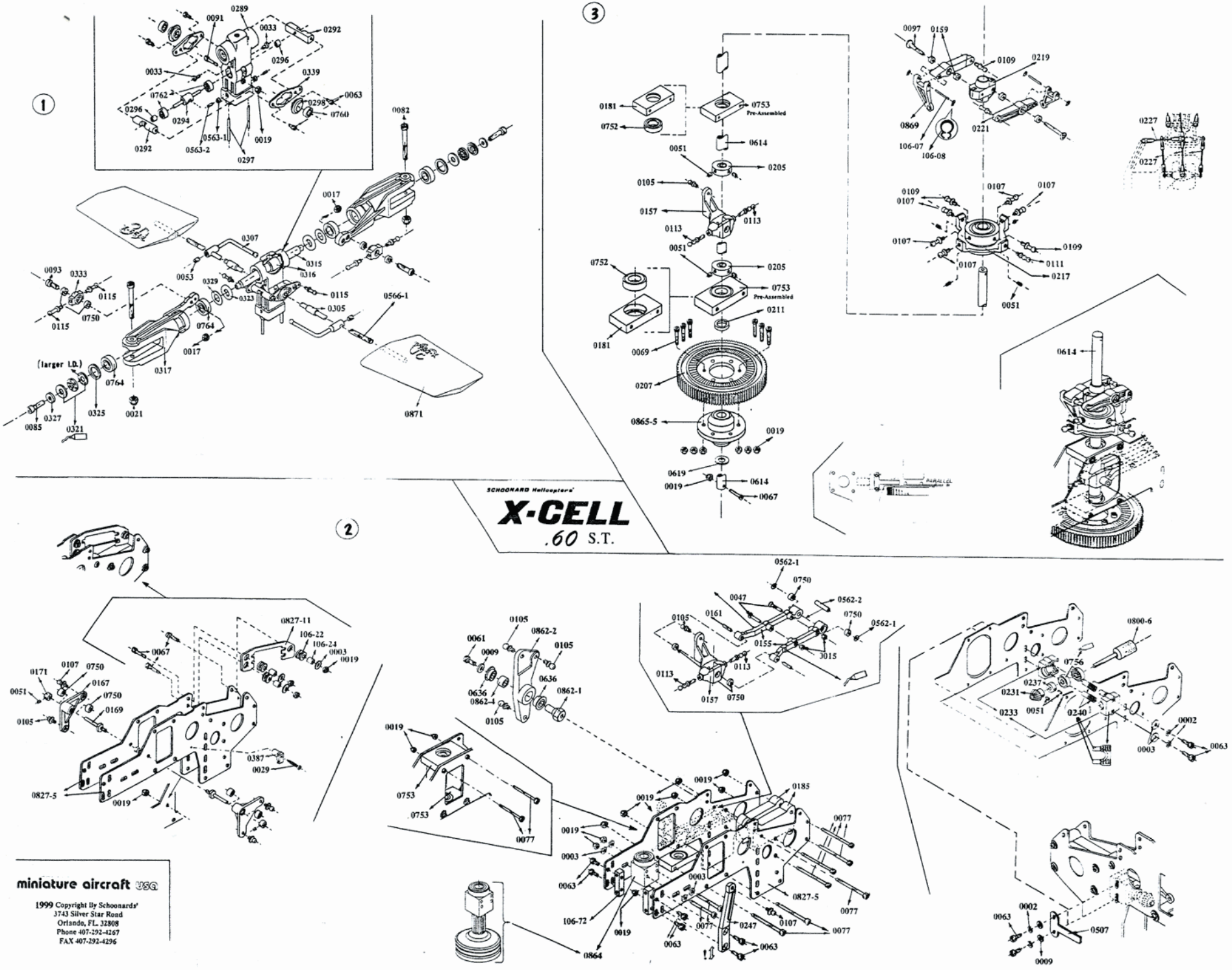
1
2
3
SCHOONARD Helicopters'
X-CELL
.60 S.T.
miniature aircraft USA
1999 Copyright Ily Schoonards'
3743 Silver Star Road
Orlando, FL. 32808
Phone 407-292-4267
FAX 407-292-4296
(larger I.D.)
Pre-Assembled
PARALLEL

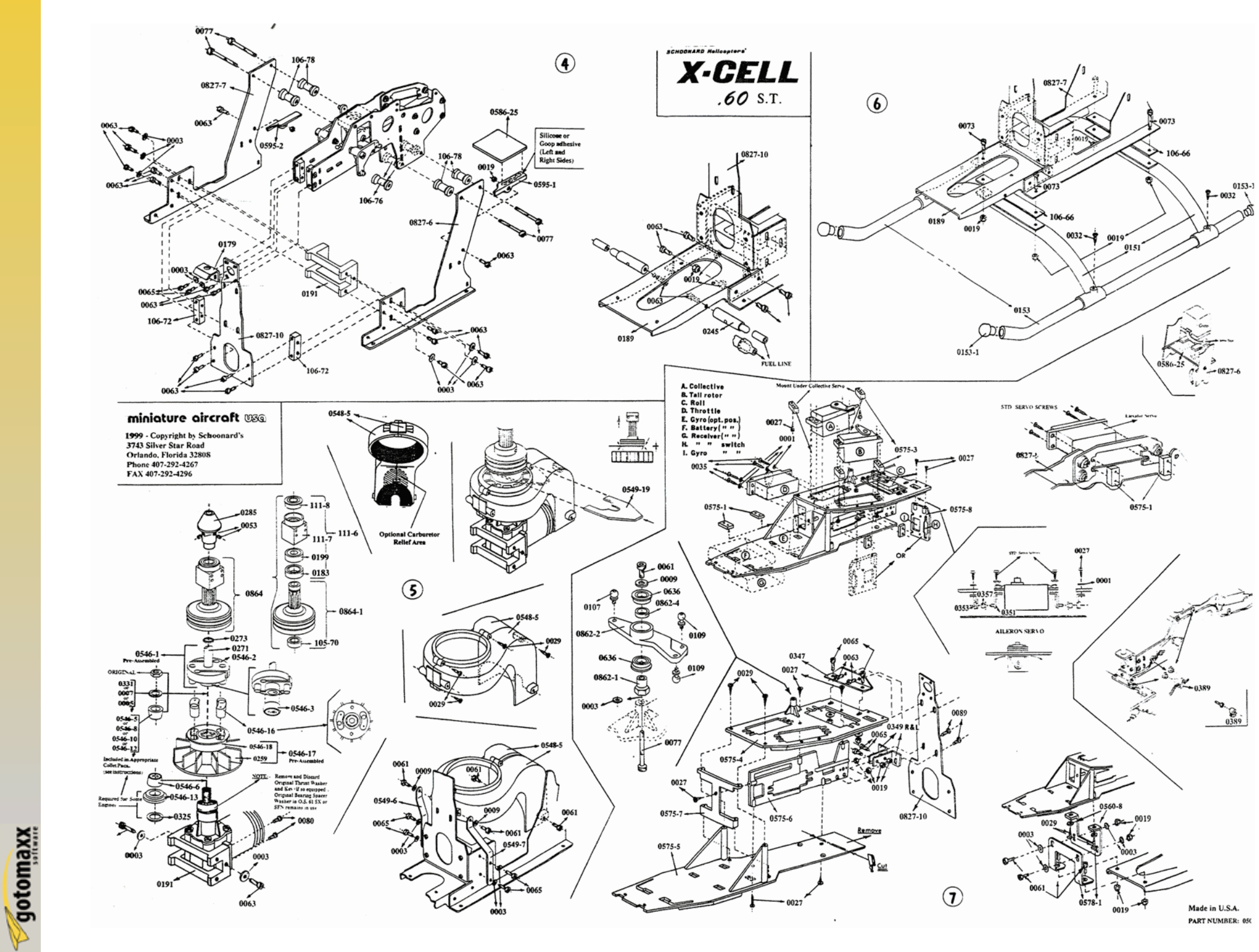

gotomaxx software

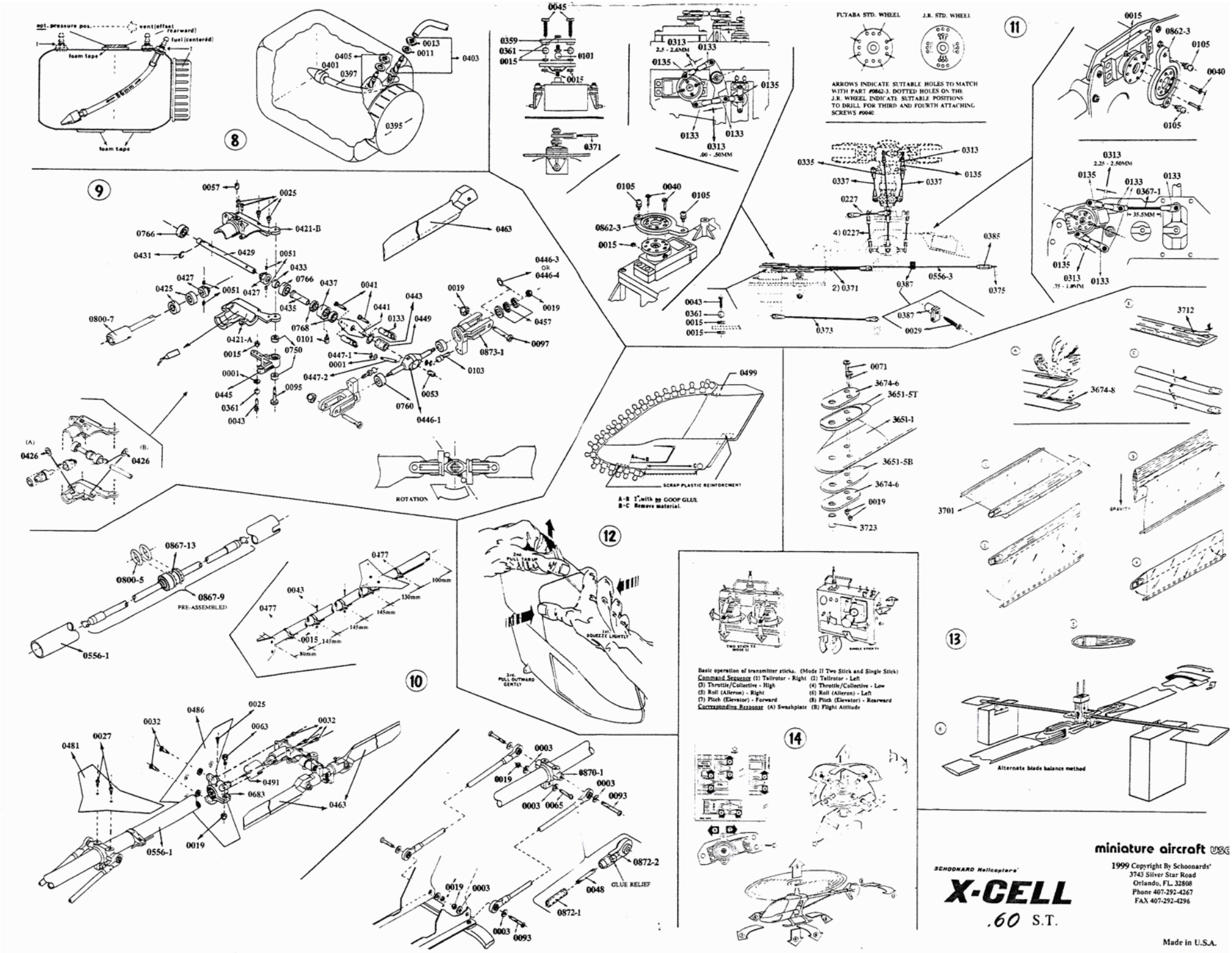

8
9
10
11
12
13
14
FUTABA STD. WHEEL
J.R. STD. WHEEL
ARROWS INDICATE SUITABLE HOLES TO MATCH WITH PART #0862-3. DOTTED HOLES ON THE J.R. WHEEL INDICATE SUITABLE POSITIONS TO DRILL FOR THIRD AND FOURTH ATTACHING SCREWS #0040.
ROTATION
SCRAP PLASTIC REINFORCEMENT
A-B 1" with no GOOP GLUE
B-C Remove material.
PRE-ASSEMBLED
GLUE RELIEF
Basic operation of transmitter sticks. (Mode II Two Stick and Single Stick)
Command Sequence (1) Tailrotor - Right (2) Tailrotor - Left
(3) Throttle/Collective - High (4) Throttle/Collective - Low
(5) Roll (Aileron) - Right (6) Roll (Aileron) - Left
(7) Pitch (Elevator) - Forward (8) Pitch (Elevator) - Rearward
Corresponding Response (A) Swashplate (B) Flight Attitude
Alternate blade balance method
SCHOONARD Helicopters
X-CELL
.60 S.T.
miniature aircraft USA
1999 Copyright By Schoonards'
3743 Silver Star Road
Orlando, FL. 32808
Phone 407-292-4267
FAX 407-292-4296
Made in U.S.A.